Journal of Photochemistry, *18* (1982) 383 - 389

Short Communication

Mercury-photosensitized decomposition of 1,2-epoxybutane

B. J. FINLAYSON-PITTS and P. S. RIPLEY
Department of Chemistry, California State University, Fullerton, CA 92634 (U.S.A.)
(Received December 23, 1981)

1. *Introduction*

Studies of the thermal decomposition of a variety of simple epoxides in the gas phase [1, 2] have established that scission of the ring at the C—O or C—C bond is a major primary step. However, few studies of the direct photolysis [3, 4] or mercury-photosensitized decomposition [5 - 8] of these compounds have been carried out. In the Hg(6 $^3P_1$)-sensitized decompositions of ethylene oxide [5] and *trans*-2,3-epoxybutane [6], the only epoxides for which such studies have been reported [8], the complex product distributions suggest that a variety of free radicals are produced. Indeed, CH_3 was observed directly by mass spectrometry in the *trans*-2,3-epoxybutane decomposition [6] and recently CH_2CHO has been reported in the case of ethylene oxide [9]. However, the mechanisms leading to free-radical production are not clear. In addition, whether scission of C—O and C—C ring bonds is a significant primary process, as it is in thermolysis [1, 2] and perhaps in direct photolysis [4], is unknown.

We report here the results of initial studies of the Hg(6 $^3P_1$)-sensitized decomposition of a different expoxide, 1,2-epoxybutane, and show that other mechanisms, in addition to those postulated for the thermolysis of this compound [2], must be invoked to rationalize the observed products and their yields.

2. *Experimental details*

The photolyses were carried out at 301 ± 3 K in cylindrical quartz cells 5 cm in diameter and 10 cm in length; the mercury vapor was provided by a drop of the liquid contained in a side-arm. The hydrocarbon products were identified by combined gas chromatography and mass spectrometry (GC–MS) using a 4 m packed column (*n*-octane on Porasil C) and a Varian Mat III gas chromatograph–mass spectrometer; both the retention times and the mass spectra of the hydrocarbons were compared with those of standard samples. Quantitative product studies were made using the same column and a Hewlett Packard model 5750 gas chromatograph with a flame ionization detector. Oxygenated hydrocarbons were qualitatively identified by GC–MS (Finnegan model 3200 instrument) using a 25 m × 0.25 mm glass capillary column

0047-2670/82/0000-0000/$02.75 © Elsevier Sequoia/Printed in Switzerland

coated with UCON HB 5100. A search for *n*-butanal and butanone at short photolysis times was carried out using a 6 m packed column (10% β,β'-oxydipropionitrile on Chromosorb W) and a gas chromatograph with a flame ionization detector. CO was measured by gas chromatography with a thermal conductivity detector (F & M Scientific model 700 instrument) using a 3 m column packed with 5A molecular sieve. Calibration of all the chromatographs was carried out frequently using prepared mixtures of known composition.

The light source was a low pressure mercury lamp (Ultraviolet Products Inc., Mineralight model PCOX1) whose output was filtered by about 4 cm of air, a Vycor shield and a 1.9 cm water filter in order to remove any 184.9 nm radiation. The intensity of the lamp in the reaction cell was determined to be 1.3×10^{16} photons s^{-1} by measuring the N_2 yields from the mercury-photosensitized decomposition of N_2O containing small amounts of *n*-butane to scavenge the $O(^3P)$ produced.

The 1,2-epoxybutane (Aldrich; minimum purity, 99%) was distilled on a 76 cm column prior to use. Two impurities identified by GC–MS as isobutylene oxide and 2,3-epoxybutane were found to be present after distillation, but their peak heights were each about 0.1% or less of that due to the 1,2 isomer and hence were considered to be negligible. The epoxide was subjected to a minimum of three freeze–pump–thaw cycles at 77 K before use. The N_2O (98.0% minimum purity in the liquid phase) was also degassed at 77 K prior to use. The argon diluent was ultrahigh purity grade (minimum purity, 99.9999%) and the helium was specified by the manufacturer to be at least 99.995% pure. Both gases were used without further purification.

Early in the work it was found that the product yields were sensitive to the treatment of the cell walls. To obtain quantitatively reproducible yields after each run, the cells were rinsed with the following chemicals in the order given: (1) concentrated HNO_3; (2) distilled water; (3) 20% HF; (4) distilled water. The cells were then dried in an oven at 818 K overnight. This procedure has been shown [10] to minimize wall losses of atoms and free radicals such as H and OH in a fast flow discharge system and hence was adopted for use here.

3. *Results*

Table 1 shows the quantum yields of the major hydrocarbon products and CO when 41 Torr of the epoxide was photolyzed in the presence of 720 Torr of argon. They are expressed relative to the production of N_2 in the $Hg(6\ ^3P_1)$-photosensitized decomposition of N_2O taking [7] $\Phi(N_2) = 1.0$. The yields were constant with photolysis time to at least 40 min, with the exception of the alkenes which decreased. In addition to the hydrocarbons listed in Table 1, smaller amounts of *n*-pentane and isobutane were also observed.

To test for the stabilization of possible excited intermediates, product yields were studied as a function of the pressure of the argon diluent (0 - 720 Torr). To test for the possibility of a secondary attack on the epoxide itself, studies were also carried out as a function of the epoxide pressure (20 - 120

TABLE 1

Quantum yields of CO and the major hydrocarbon products

Product	*Quantum yield*
CO	0.11
C_2H_6	0.03
n-C_4H_{10}	0.03
C_3H_6	0.03[a]
C_3H_8	0.02
1-C_4H_8	0.008[a]
CH_4	0.003

[a]For the alkenes, where the net rate of production decreases with photolysis time, the quantum yields were estimated by extrapolation of the data to $t = 0$.

Torr, with the total pressure being maintained at approximately 750 Torr with argon). No significant trend in the yields was observed in either case. Similarly, replacing the argon diluent by helium, which is a less efficient deactivator than argon and allows more rapid diffusion to the cell walls, did not alter the product yields.

The quantum yields of the oxygenates n-butanal and butanone are of particular interest as they are the products anticipated from C—O bond scission followed by isomerization. At short photolysis times (20 min or less) no peaks corresponding to n-butanal and butanone were observed on the shoulder of the large epoxide peak using gas chromatography and flame ionization detection. From this we estimate upper limits for the quantum yields of C_3H_7CHO and $CH_3COC_2H_5$ of 0.04 and 0.006 respectively. These products were observed by GC–MS at long photolysis times (60 min or more) where, however, secondary reactions could lead to their formation.

Obtaining sufficient yields for GC–MS identification of the other oxygenates present required a relatively long photolysis time (about 80 min) in helium and trapping out the reaction mixture from the entire cell at 77 K. As well as n-butanal and butanone, the following products, given in approximate order of observed peak heights in the total ion trace, were tentatively identified on the basis of their mass spectra [11]: n-pentanal, 3-methylbutanal, 2-ethylbutanal, 3-methyl-2-pentanone, 2-methyl-2-propen-1-ol, 3-hexanone, 3-buten-1-ol and crotonaldehyde. In addition to the volatile products, a clear liquid was observed forming on the cell walls at long photolysis times (more than 1 h); presumably this is also an oxygenated polymeric compound.

4. Discussion

The nature of the products and their quantum yields suggest a complex free-radical-dominated mechanism, as has been previously postulated [5 - 8] for other epoxides. For example, the major hydrocarbon products C_2H_6, n-C_4H_{10} and C_3H_8 can be qualitatively explained by the recombination of CH_3 and C_2H_5 radicals.

It is worthwhile to consider possible sources of these radicals in terms of what is known about the fate of epoxides excited by other means. In the thermal decomposition of 1,2-epoxybutane, about 70% of the observed reaction products were isomers of the epoxide [2]; the products are thought to be formed by scission of a ring C—O or C—C bond followed by internal hydrogen transfers to form the observed products which include *n*-butanal and butanone. Similar reactions are thought to occur with the biradical formed upon addition of $O(^3P)$ to olefins [12] (although the results of recent experiments [13] indicate that substitution as well as addition may occur in reactions between $O(^3P)$ and olefins) and perhaps in the direct photolysis of simple epoxides [4]. In the present case, cleavage at a C—O bond followed by isomerization would produce excited *n*-butanal and butanone:

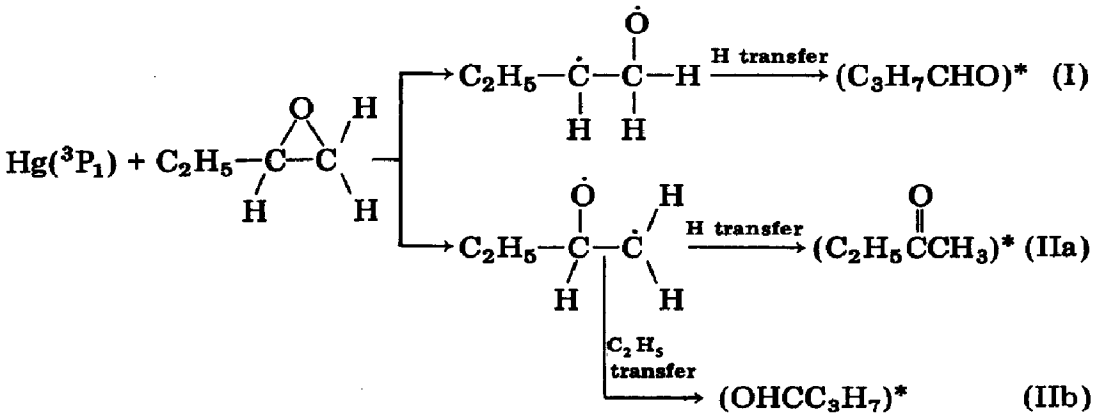

To determine whether these compounds would have sufficiently long lifetimes to be stabilized under our experimental conditions, the rates of decomposition of these excited carbonyls were estimated using the Rice–Ramsperger–Kassel approximation [14]:

$$k = A(1 - E^*/E)^{s-1} \tag{1}$$

E is the total energy in the molecule and is 135.8 kcal mol^{-1} for *n*-butanal and 143.8 kcal mol^{-1} for butanone, based on the reaction exothermicities and the initial energy of the excited mercury (112.2 kcal mol^{-1}) [7]. (The heats of formation [15] of *n*-butanal and butanone are −49.0 kcal mol^{-1} and −57.0 kcal mol^{-1} respectively, and that of 1,2-epoxybutane is estimated to be −25.4 kcal mol^{-1} using standard thermochemical kinetic techniques [16].) E^* is the activation energy for decomposition, which for C—C bond cleavage is taken to be the bond dissociation energy (about 82 kcal mol^{-1}). If $A \approx 10^{17}$ s^{-1} and $s = 22$, then k is about $10^{8.6}$ s^{-1} for *n*-butanal and about $10^{9.3}$ s^{-1} for butanone. For C—H bond cleavage ($E^* = 98$ kcal mol^{-1}), k is about $10^{5.3}$ s^{-1} for the aldehyde and about $10^{6.6}$ s^{-1} for the ketone. Under typical experimental conditions (argon at 720 Torr) the collision frequency is about $10^{9.7}$ s^{-1}. Since argon is likely to be a relatively inefficient deactivator, C—C bond scission is likely to occur in the excited carbonyl products

of (I) and (II). C—H bond scission is somewhat less probable since the excited species must survive about 10^3 - 10^4 collisions before decomposing.

In summary, cleavage of a C—O bond may be a primary reaction step in the mercury-photosensitized decomposition of 1,2-epoxybutane, as it is in thermolysis. However, the carbonyl products formed on isomerization of the biradical are expected to have sufficient energy to decompose via C—C bond cleavage. This may then be one source of free radicals such as CH_3 and C_2H_5.

An analogy can be drawn with the direct photolysis of butanone, which is known to produce C_2H_5 + CH_3CO and CH_3 + COC_2H_5, and of *n*-butanal, which has five known primary processes, some producing free radicals and others stable molecules [17]. However, if excited *n*-butanal is a significant intermediate in the mercury-photosensitized decomposition of the epoxide, then the relative importance of its various modes of decomposition must be different from the case of direct photolysis. For example, direct excitation [17] at 187 or 254 nm leads to significant production of *n*-C_3H_7 + HCO, C_3H_8 + CO and C_2H_4 + CH_3CHO. However, in the present case there is evidence only for significant yields of C_3H_8 and CO, and the yield of CO was more than five times that of C_3H_8. If excited *n*-butanal is the precursor to C_3H_8, then an additional source of CO must be present and the modes of decomposition must not parallel those known for the direct photolysis.

Direct scission of C—C bonds at positions a or b

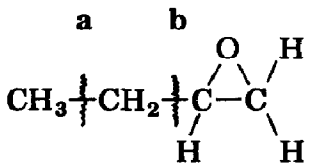

is another possible radical source. In addition, hydrogen atom abstractions similar to those of the mercury-photosensitized decomposition of alkanes [7] may occur. Indeed, in the mercury-photosensitized decomposition of ethylene oxide, large yields of CH_2CHO were observed recently [9], implying that H (or HgH) was also produced. Thus, abstraction of a ring hydrogen followed by the reaction

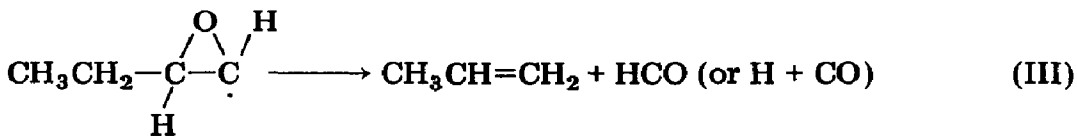

(III)

is a second possible source of propylene. A reaction analogous to (III) was proposed by Cvetanovic and Doyle [6] to explain the production of ethylene in the mercury-sensitized decomposition of *trans*-2,3-epoxybutane.

It has been suggested that Hg(6 $^3P_1$) may abstract the ring oxygen atom to produce the corresponding alkene. The low quantum yield for 1-butene observed in these studies indicates that this is not a major primary process;

indeed, the quantum yield of 0.008 sets an upper limit on the process since the alkene may also be produced by reactions of the free radicals present.

The production of oxygenated hydrocarbons *larger* than the C_4 is also indicative of free-radical reactions. Most of the oxygenates tentatively identified by GC–MS can be rationalized in terms of hydrogen atom abstractions from the epoxide, rearrangement of the epoxidic radical and reaction with CH_3 or C_2H_5.

In summary, the products observed in the mercury-photosensitized decomposition of 1,2-epoxybutane appear to arise as a result of free-radical reactions, in agreement with earlier studies of analogous compounds [5 - 8]. While it is possible that scission of a ring C—O bond followed by the formation of excited *n*-butanal and/or butanone as intermediates occurs to some extent, the nature and yields of some of the products (*e.g.* C_3H_6 and CO) suggest that other processes such as hydrogen atom abstraction from the epoxide are also significant. Thus the primary reaction paths in the mercury-photosensitized decomposition appear to be more complex than in the thermolysis of epoxides or the addition of $O(^3P)$ to olefins. A useful method of studying these reactions in the future would be to detect directly the free radicals produced at short reaction times. For example, photoionization mass spectrometry [18], which can detect small amounts of free radicals in the presence of large concentrations of the reactant by selectively ionizing only the radicals, could be very usefully applied to the elucidation of the primary steps in these reactions.

The authors are grateful to the Research Corporation for support of this work. We also wish to thank Dr. D. Bailey and Dr. K. Van Cauwenberghe for assistance with the GC–MS analyses, and Dr. J. N. Pitts, Jr., Dr. R. J. Cvetanovic, Dr. F. H. Dorer and Dr. R. Atkinson for helpful discussions and/or comments on the manuscript.

1 S. W. Benson, *J. Chem. Phys.*, *40* (1964) 105.
D. W. Setser, *J. Phys. Chem.*, *70* (1966) 826.
G. B. Shah, E. P. Chock and R. G. Rinker, *Ind. Eng. Chem. Fundam.*, *10* (1971) 13.
2 M. C. Flowers and D. E. Penny, *J. Chem. Soc., Faraday Trans I*, *71* (1975) 851, and references cited therein.
3 R. Gomer and W. A. Noyes, Jr., *J. Am. Chem. Soc.*, *72* (1950) 101.
B. C. Roquitte, *J. Phys. Chem.*, *70* (1966) 2699.
M. Kawasaki, T. Ibuki, M. Iwasaki and Y. Takezaki, *J. Chem. Phys.*, *59* (1973) 2076.
4 D. R. Paulson, A. S. Murray, D. Bennett, E. Mills, Jr., V. O. Terry and S. D. Lopez, *J. Org. Chem.*, *42* (1977) 1252.
5 M. K. Phibbs, B. de B. Darwent and E. W. R. Steacie, *J. Chem. Phys.*, *16* (1948) 39.
R. J. Cvetanovic, *Can. J. Chem.*, *33* (1955) 1684.
G. De Maré and O. P. Strausz, *Probl. Khim. Kinet. M.*, (1979) 38 - 46.
G. R. De Maré, *J. Photochem.*, *7* (1977) 101.
6 R. J. Cvetanovic and L. C. Doyle, *Can. J. Chem.*, *35* (1957) 605.
7 R. J. Cvetanovic, Mercury photosensitized reactions, *Prog. React. Kinet.*, *2* (1964) 39, and references cited therein.

8 C. M. Neeley, Kinetics of the mercury photosensitized decomposition of ethylene and propylene oxides, *Ph.D. Thesis*, University of Arkansas, 1969; *Diss. Abstr. Int. B, 30* (7) (1970) 3064.
9 H. E. Hunziker, K. Kleinermanns, H. Kneppe, A. C. Luntz and H. R. Wendt, The radical CH_2CHO: spectroscopy and role in olefin oxidation reactions, *15th Int. Symp. on Free Radicals, Ingonish Beach, Nova Scotia, June 2 - 7, 1981.*
10 B. J. Finlayson-Pitts, unpublished data, 1976.
11 E. Stenhagen, S. Abrahamsson and F. W. McLafferty, *Registry of Mass Spectral Data*, Vol. 1, Wiley, New York, 1974.
12 R. J. Cvetanovic, Addition of atoms to olefins in the gas phase, *Adv. Photochem., 1* (1963) 115.
R. E. Huie and J. T. Herron, Reactions of atomic oxygen $O(^3P)$ with organic compounds, *Prog. React. Kinet., 8* (1978) 1.
13 K. Kleinermanns and A. C. Luntz, *J. Phys. Chem., 85* (1981) 1966.
14 S. W. Benson, *Foundations of Chemical Kinetics*, McGraw-Hill, New York, 1960.
15 D. R. Stull, E. F. Westrum, Jr., and G. C. Sinke, *The Chemical Thermodynamics of Organic Compounds*, Wiley, New York, 1969.
16 S. W. Benson, *Thermochemical Kinetics*, Wiley, New York, 2nd edn., 1976.
17 J. G. Calvert and J. N. Pitts, Jr., *Photochemistry*, Wiley, New York, 1966, and references cited therein.
18 I. T. N. Jones and K. D. Bayes, *Proc. 14th Int. Symp. on Combustion, Pennsylvania State University, University Park, PA, August 20 - 25, 1972*, Combustion Institute, Pittsburgh, PA, 1973; *J. Am. Chem. Soc., 94* (1972) 6869.
J. R. Kanofsky and D. Gutman, *Chem. Phys. Lett., 15* (1972) 236.